Distributed by
www.AmeraProducts.com
Phone: (800) 608-6568
Fax: (409) 840-5545
info@ameraproducts.com

MODEL No:	0264-1
ISSUED:	1-87
REVISED:	8-04

SURFACE MOUNTED DOUBLE ROLL TOILET TISSUE HOLDER

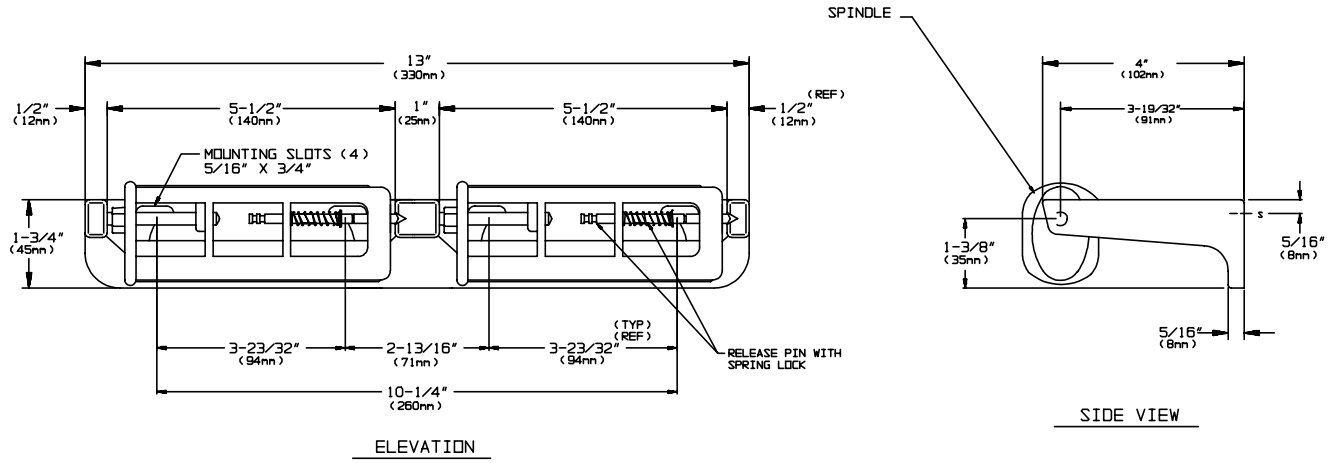

SPECIFICATION

Surface Mounted Double Roll Toilet Paper Holder with controlled delivery shall hold and dispense all standard core roll tissue, up to 6" (152 mm) in diameter and be fabricated of cast aluminum with a satin matte silver-gray finish. The "no waste" rocking action spindle shall be fabricated of impact resistant, ABS thermoplastic and be theft resistant with a concealed release mechanism. Spindle shall rotate 1/2 revolution for each operation and return to its original position. Roll core shall not be removable until tissue is exhausted.

Surface Mounted Double Roll Toilet Paper Holder with controlled delivery shall be Model № 0264-1 of American Specialties, Inc. 441 Saw Mill River Road Yonkers, New York 10701-4913

INSTALLATION

Unit is surface mounted on wall or partition using self tapping screws (by others). For compliance with ADA Accessibility Guidelines, unit should be installed so that tissue roll centerline is between 44" (1118mm) maximum above finished floor (AFF) and 19″ (483mm) minimum AFF.

OPERATION

Spindles revolve 1/2 revolution for each operation and then return to their original position. Roll core prevents access to release pin and cannot be removed from spindle until exhausted. Unit is replenished by releasing a concealed pin which in turn releases a spring lock mechanism on spindle. Spindles operate independently.

THIS MANUFACTURER RESERVES THE RIGHT TO MAKE CHANGES IN DESIGN OR DIMENSIONS WITHOUT FORMAL NOTICE